DAIKIN

PLXPMT2407



Static Blower

FDN-H Series
FGN-H Series

TKDN
TINGKAT
KOMPONEN
DALAM NEGERI



COOLING ONLY [50Hz]

R-410A

JAPAN QUALITY

R410A Ducted Split Features

Tough Casing
Casing made of electro galvanized mild steel, coated with epoxy polyester for protection against corrosion.

Indoor Air Quality
A 2-inch rail is provided at return air for installation of field-supplied filter.

Part Load Operation
The modular unit configuration allows it to operate under part load conditions to meet the required cooling capacity.

Convertible Air Throw Direction
Versatile, as air discharge direction (vertical or horizontal) can be changed at site according to requirements.
(For size 12.5hp and above only)

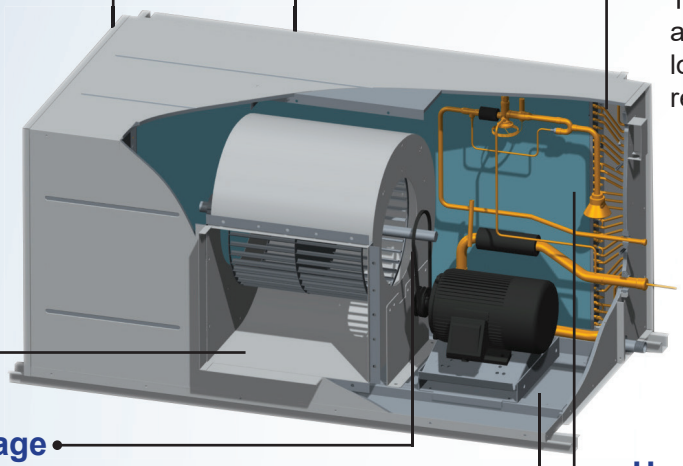

Changeable Drive Package
The belt driven evaporator motor allows the change of pulley on-site to accommodate different static pressure and air flow requirements.
(For size 12.5hp and above only)

Heat Exchanger
Seamless inner grooved copper tubes for optimum heat transfer.

Polyethylene (PE) Insulation
10mm-thick, fire-resistant insulation with durable surface that resists tough dirt and has a higher degree of puncture resistance compared to fiberglass.

Auto Random Restart with Last-State-Memory
In the event of a sudden power failure during operation, unit restarts automatically in 64 different recovery timing patterns (within 180 seconds to 244 seconds) and the unit will operate based on the previous setting (operating mode, temperature setting and fan speed). This ensures that air conditioners in the same building resume randomly instead of all units resuming at the same time, preventing power surge after a blackout.

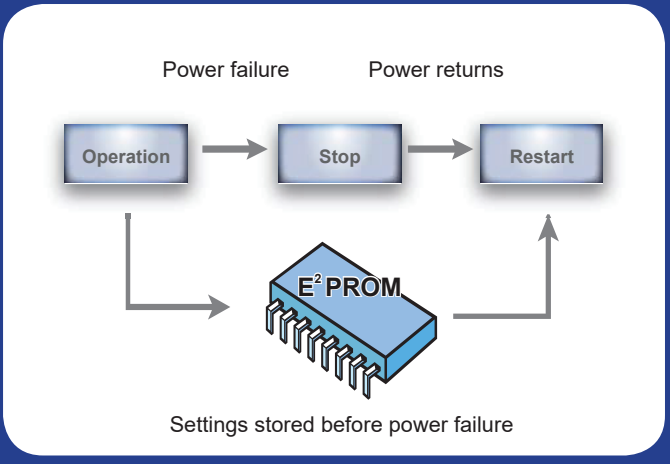

R410A Condensing Unit Features

Condenser Fan Motor with IP55 Ingress Protection
The motor is designed with dust proof bearing to ensure the reliability and smooth operation.

Convertible Air Throw
Flexible, as air discharge direction (vertical or horizontal) can be changed at site according to requirements.
(For sizes 100, 125 and 150)

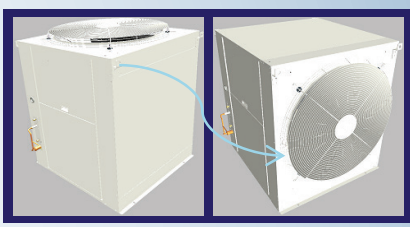

Service-friendly Design
Easy access to compressor and control panel. Fan motor assembly can easily be removed for servicing. Condenser coil is easier to clean as it has lower resistance to air flow, thus, accumulates lesser dust.

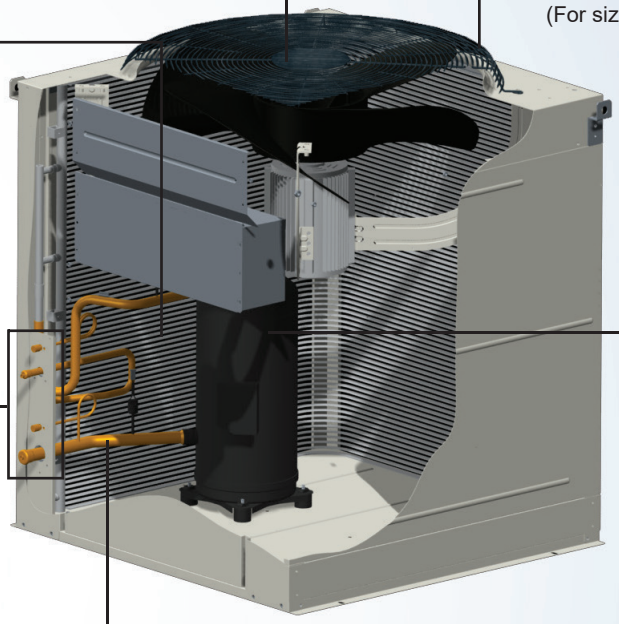

Service Access Valve
Valves are provided for installation of pressure gauge at site. These valves are easily accessible without the needs to open the service panel.

High Efficiency Scroll Compressor
High efficiency, low noise and hermetically sealed scroll compressor for optimum performance. It also comes with an internal overload protection and crankcase heater.

Long Piping
Maximum piping length and elevation of 75m and 30m respectively, providing design flexibility for large-sized buildings.

Product Features
- Balance loading helps enhance compressor reliability by balancing compressor run time of each unit.
- High Pressure and Low Pressure protection.
- Compressor & motor current overload protection.
- Sensor fault indication.
- Minimum compressor running time to ensure oil return.
- Phase sequential is used to detect for any wrong phase and phase loss during installation and operation.

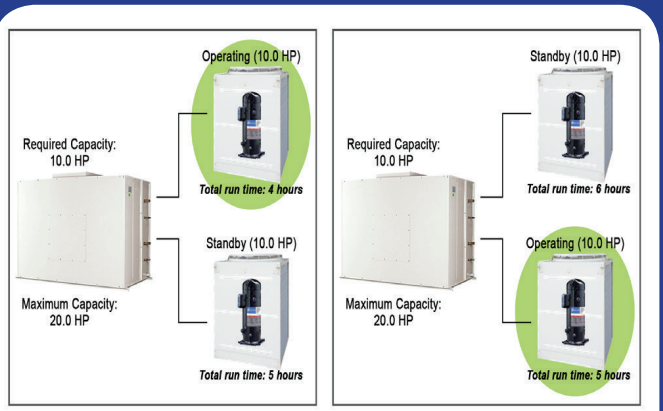

Compressor with lower run time will be operated

Microchannel Coil

Microchannel at a Glance

The condenser's heat exchanger is made up of all-aluminium microchannel coil. Comparing to the conventional fin-and-tube coil, the microchannel coil resists galvanic corrosion and has a stronger structure. With the same face area, the microchannel coil requires lesser refrigerant charge while providing better heat exchange, and is lighter over the conventional fin-and-tube coil.



Superior Heat Exchange Performance

Micro-multiport extrusion tube increases the heat transfer surface area between refrigerant and air. Its small diameter of the extrusion tubes and the continuous contact between the tubes with the fins ensures efficient heat transfer.

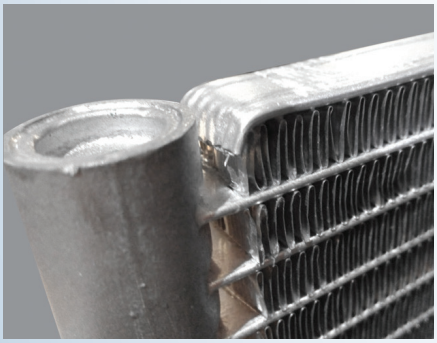

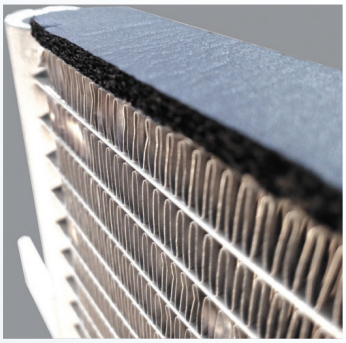

Robust

Reinforcement dummy tubes are placed on the top and bottom to protect the first and last micro-multiport extrusion tube. In addition, insulation is added to safeguard the coil from vibration during transportation. The coil structure is robust and is less susceptible to fin damage as compared to conventional fin-and-tube coil. Therefore, high pressure spray wash can be used to clean the coils.

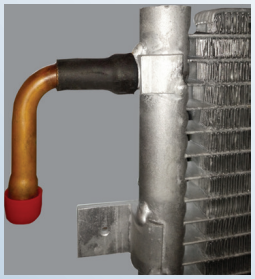

Metallurgical Bond

The microchannel coil has lesser brazed joints compared to the conventional fin-and-tube coil. All aluminium-to-copper joints are protected with heat shrink sleeve to prevent corrosion.

Wired Controller



BRC51A62 : FDN80/100H
BRC51A64 : FDN125/150H

Features:

- Temperature Setting of 16ºC to 30ºC
- Temperature operate in ºC and ºF
- Fan Speed Setting (H/M/L/Auto) *
- Cool/Heat/Fan/Dry
- Energy Saving Mode
- Self-diagnosis Error Code Display
- Key Lock & Fan-lock Function
- Real Time Clock with 7 Days Programmable Timer
- Sleep function
- Error indicator
- Batteries backup and retain setting during power failure
- Last state memory (memory backup setting from main board)
- Delay timer (1 or 2 hours)
- Interaction with wireless handset (BRC52A62/64)

* Applicable for FDN80/100H only.



BRC51D64
(2FDN200H, 2FGN250H, 2FGN300H, 3FGN300H, 3FGN350H, 4FGN400H, 3FGN450H, 4FGN500H, 4FGN600H)

Features:

- Temperature Setting of 16ºC to 30ºC
- Energy Saving Mode
- Self-diagnosis Error Code Display
- Key Lock Function
- Compressor Running Display
- Real Time Clock with 7 Days Programmable Timer with 2 sets/day



FDN80/100HV1

TKDN
TINGKAT KOMPONEN DALAM NEGERI



RN80HY1



RCN100/125/150HY1

Specification for ducted split H series - Cooling only (R410A)

Indoor model name			FDN80HV1	FDN100HV1	FDN125HY1	FDN150HY1	2FDN200HY1	2FGN250HY1	2FGN300HY1
Outdoor model name			**RN80HY1**	**RCN100HY1**	**RCN125HY1**	**RCN150HY1**	**RCN100HY1x2**	**RCN125HY1x2**	**RCN150HY1x2**
Nominal cooling capacity		Btu/hr	80000	100000	125000	150000	200000	250000	300000
		W	23400	29300	36600	44000	58600	73200	88000
Nominal EER		W/W	3.30	2.93	3.23	2.97	2.97	3.07	2.88
Indoor	Power supply	V/Ph/Hz	220-240/1/50		380-415/3/50				
	Airflow (H/M/L) or (H only)	cfm	2300/2200/2000	3000/2800/2500	3750	4500	6000	7500	9000
	External static pressure (H/M/L) or (H only)	Pa	100/95/80	100/85/70	150				
	Sound pressure level (H/M/L) or (H only)	dBA	52/52/52	55/54/54	53	56	61	63	66
	Dimensions (HxWxD)	mm	553x1402x605		776x1540x850		885x1794x850	1231x1766x1069	
	Net weight	kg	83	84	159		196	323	337
Outdoor	Power supply	V/Ph/Hz	380-415/3/50						
	Sound pressure level	dBA	69	65		70	65		70
	Dimensions (HxWxD)	mm	929x1235x496	1067x880x880	1067x980x980	1166x980x980	1067x880x880	1067x980x980	1166x980x980
	Net weight	kg	111	135	157	177	135	157	177
	Pipe connection - Liquid	mm / in.	12.7 / ½			15.88 / ⅝	12.7 / ½		15.88 / ⅝
	Pipe connection - Gas	mm / in.	22.23 / ⅞	25.40 / 1	28.58 / 1⅛	34.92 / 1⅜	25.40 / 1	28.58 / 1⅛	34.92 / 1⅜
	Max. piping length	m	75						
	Max. piping elevation	m	30						

Indoor model name			3FGN300HY1	3FGN350HY1		4FGN400HY1	3FGN450HY1	4FGN500HY1	4FGN600HY1
Outdoor model name			**RCN100HY1x3**	**RCN100HY1**	**RCN125HY1x2**	**RCN100HY1x4**	**RCN150HY1 x3**	**RCN125HY1x4**	**RCN150HY1x4**
Nominal cooling capacity		Btu/hr	300000	350000		400000	450000	500000	600000
		W	88000	102500		117200	131900	146500	175850
Nominal EER		W/W	2.96	2.97		2.98	2.87	2.93	2.85
Indoor	Power supply	V/Ph/Hz	380-415/3/50						
	Airflow	cfm	9000	10500		12000	13500	15000	18000
	External static pressure	Pa	200			250			300
	Sound pressure level	dBA	66				68		70
	Dimensions (HxWxD)	mm	1231x1766x1069	1486x2022x1069		1486x2174x1336			1918x2174x1775
	Net weight	kg	337	431		488	533	580	899
Outdoor	Power supply	V/Ph/Hz	380-415/3/50						
	Sound pressure level	dBA	65				70	65	70
	Dimensions (HxWxD)	mm	1067x880x880		1067x980x980	1067x880x880	1166x980x980	1067x980x980	1166x980x980
	Net weight	kg	135		157	135	177	157	177
	Pipe connection - Liquid	mm / in.	12.7 / ½				15.88 / ⅝	12.7 / ½	15.88 / ⅝
	Pipe connection - Gas	mm / in.	25.40 / 1		28.58 / 1⅛	25.40 / 1	34.92 / 1⅜	28.58 / 1⅛	34.92 / 1⅜
	Max. piping length	m	75						
	Max. piping elevation	m	30						

1. Rated cooling capacities are based on the following conditions: Indoor temp. 27°CDB, 19°CWB; outdoor temp. 35°CDB.
2. The condensing unit is shipped with only nitrogen holding charge. Refrigerant charging is required at site.
3. All units are being teasted and comply to ISO5151 (Non-Ducted Unit) or ISO13253 (Ducted Unit)

NOTES

Perfecting the Air

Kenyamanan Tanpa Batas

- Ask a qualified installer or contractor to install this product. Do not try to install the product yourself. Improper installation can result in water or refrigerant leakage, electrical shock, fire or explosion.
- Use only those parts and accessories supplied or specified by Daikin. Ask a qualified installer or contractor to install those parts and accessories. Use of unauthorised parts and accessories or improper installation of parts and accessories can result in water or refrigerant leakage, electrical shock, fire or explosion.
- Read the user's manual carefully before using this product. The user's manual provides important safety instructions and warnings. Be sure to follow these instructions and warnings.

If you have enquiries, please contact your local importer, distributor and/or retailer.

DEALER RESMI

Cautions on product corrosion

1. Air conditioners should not be installed in areas where corrosive gases, such as acid gas or alkaline gas, are produced.
2. If the outdoor unit is to be installed close to the sea shore, direct exposure to the sea breeze should be avoided. If you need to install the outdoor unit close to the sea shore, contact your local distributor.

DCC **0800 1 081 081**

DAIKIN CONTACT CENTER

Jam Beroperasi:

Senin - Jumat: 07:00 - 19:00 WIB

Sabtu - Minggu & Libur Nasional: 07:00 - 17:00 WIB

PT DAIKIN AIRCONDITIONING INDONESIA

Menara Astra 7th & 8th Floor, Jl. Jenderal Sudirman Kav. 5-6,
Kel. Karet Tengsin, Kec.Tanah Abang, Jakarta Pusat, DKI Jakarta - 10220
Telp : +6221 8665 6886 | Website : www.daikin.co.id

• **SERVICE CENTER : Jakarta Selatan**, Telp. : 021-2782 5545 | **Samarinda**, Telp. : 0541-252 2889 • **WORKSHOP: Cirebon**, Telp. : 0231-8817 512 | **Banjarmasin**, Tlp. : 0511-3258 969 | **Aceh**, Tlp. : 0651-7318 036 | **Lombok**, Tlp. : 0370-7843 231 | **Jambi**, Tlp. : 0741-3066 790 | **Padang**, Tlp. : 0751-896 2684 • **TRAINING CENTER : Sunter**, Telp. : 021-650 5030 • **BRANCH : Bekasi**, Telp. :021-2945 0585 | **Tangerang**, Telp. : 021-5314 1195 | **Bandung**, Telp. : 022-522 5150 | **Semarang**, Telp. : 024-7660 3221 | **Yogyakarta**, Telp. : 0274-551 321 | **Surabaya**, Telp. : 031-503 1138 | **Denpasar**, Telp. : 0361-900 5514 | **Makassar**, Telp. : 0411-805 2691 | **Palembang**, Telp. : 0711-573 2282 | **Pekanbaru**, Telp. : 0761-561 139 | **Medan**, Telp. : 061-4200 8866 | **Manado**, Telp. : 0431-719 1199 | **Batam,** Tlp. : 0778-4171 445

TÜVRheinland CERTIFIED
Management System ISO 9001:2015
www.tuv.com ID 9105084313

AMTIVO ISO 27001 Information Security Management

UKAS MANAGEMENT SYSTEMS 8289